THE UNITED REPUBLIC OF TANZANIA
NATIONAL EXAMINATIONS COUNCIL
PRIMARY SCHOOL LEAVING EXAMINATION

04E **MATHEMATICS**

Time: 2:00 Hours **Wednesday, 11th September 2013 a.m**

Instructions

1. This paper consists of **fifty (50)** questions in sections A, B and C.
2. Answer **all** the questions in each section.
3. Read all the given instructions in the **special answer sheet (OMR)** and fill in all the required information.
4. Write your **Examination Number** and then **shade** it in your answer sheet.
5. Show clearly all the working in each question and **shade** a letter of the correct answer in the answer sheet provided. If the correct answer is A you will shade as follows:

[A]	[B]	[C]	[D]	[E]

6. If you have to change your answer, you must rub out the shading **very neatly** before shading the new one. Use a **clean rubber.**
7. Use **HB pencil** only.
8. Cellular phones and calculators are **not allowed** in the examination room.

SECTION A: MATHEMATICAL OPERATIONS

For each of questions 1 – 25, work out the answer, then choose the correct option and **shade** its corresponding **letter** in the answer sheet provided.

NO	QUESTION	WORKING SPACE
1.	$6.894 - 5.759 =$ A 1.085 B 1.045 C 1.135 D 1.145 E 1.125.	
2.	$898 + 5{,}773 =$ A 6,571 B 6,661 C 6,561 D 6,671 E 5,561.	
3.	$0.0075 \div 0.03 =$ A 0.0025 B 0.025 C 0.00025 D 2.5 E 0.25.	
4.	$472 \times 8{,}934 =$ A 4,216,884 B 4,126,848 C 4,216,848 D 4,126,748 E 4,206,848.	

NO	QUESTION	WORKING SPACE
5.	$4\frac{3}{8}+2\frac{1}{2}=$ A $6\frac{4}{10}$ B $6\frac{4}{8}$ C $6\frac{7}{8}$ D $6\frac{2}{5}$ E $6\frac{1}{2}$.	
6.	$4\frac{5}{10}-1\frac{3}{5}=$ A $3\frac{2}{5}$ B $\frac{13}{20}$ C $3\frac{9}{10}$ D $2\frac{2}{5}$ E $2\frac{9}{10}$.	
7.	$-9+(^{-}4+^{+}2)=$ A $^{-}3$ B $^{-}15$ C $^{+}15$ D $^{+}11$ E $^{-}11$.	
8.	$-13-(67-84)=$ A $^{-}30$ B 40 C $^{-}4$ D $^{+}4$ E $^{+}30$.	
9.	$1\frac{2}{25}\div\frac{3}{14}=$ A $5\frac{1}{25}$ B $\frac{81}{350}$ C $\frac{303}{350}$ D $\frac{14}{25}$ E $1\frac{28}{75}$.	

NO	QUESTION	WORKING SPACE
10.	$95{,}481 \div 309 =$ A 219 B 309 C 319 D 39 E 209.	
11.	$0.021 \times 9.98 =$ A 0.19958 B 0.19858 C 0.20858 D 0.20758 E 0.20958.	
12.	$(163.55 + 490.65) + 15.95 =$ A 660.15 B 669.15 C 669.97 D 670.15 E 670.97.	
13.	The product of $3\frac{1}{3}$ and $2\frac{7}{20}$ is A $5\frac{7}{60}$ B $6\frac{7}{60}$ C $7\frac{7}{60}$ D $7\frac{5}{7}$ E $7\frac{5}{6}$.	
14.	$6{,}407 - T = 5{,}518$. The value of T is A -889 B 889 C 989 D 999 E 1,999.	

NO	QUESTION	WORKING SPACE
15.	If 405 is added to the square of 202 the answer is: A 4,029 B 4,669 C 40,209 D 41,209 E 41,206	
16.	The Greatest Common Factor (G.C.F) of 8, 18 and 24 is A 2 B 3 C 4 D 6 E 8.	
17.	Change 0.008 into percentage. A 0.08% B 0.8 % C 8% D 0.008% E 80%.	
18.	If $6x-4(x+2)=-4$, find the value of x. A -3 B -2 C 3 D 0 E 2	
19.	Find the difference between the square roots of 324 and 256. A 2 B 14 C 16 D 18 E 34.	

NO	QUESTION	WORKING SPACE
20.	How many $\frac{1}{16}$ are there in $\frac{1}{4}$? A 2 B 4 C 8 D 16 E 64.	
21.	A standard six pupil was born in the year MCMXCVIII. What is this year in normal numbers? A 2008 B 1993 C 1943 D 2003 E 1998.	
22.	Round off 2,349,673 to the nearest thousands. A 2,340,000 B 2,300,000 C 2,349,000 D 2,350,000 E 2,000,000.	
23.	Find the sum of all prime numbers found between 12 and 20. A 32 B 30 C 45 D 49 E 64 .	
24.	Change 5.2% into a simplified fraction. A $\frac{13}{500}$ B $\frac{13}{250}$ C $\frac{26}{250}$ D $\frac{52}{100}$ E $\frac{52}{1000}$.	

NO	QUESTION	WORKING SPACE
25.	Multiply 3km 250m by 4. Give your answer in centimeters. A 12,800 cm B 13,000 cm C 1,200,000 cm D 1,300,000 cm E 1,280,000 cm.	

SECTION B: FIGURES

For each of questions 26 – 38, work out the answer, then choose the correct option and **shade** its corresponding **letter** in the answer sheet provided.

NO	QUESTION	WORKING SPACE r
26.	Find the area of the rectangle ABCD, whose perimeter is 98 cm. 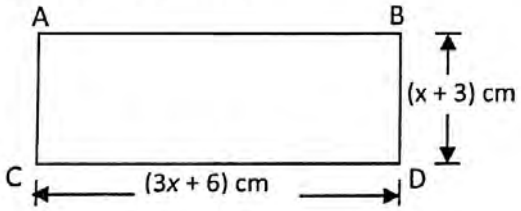 A 300 cm^2 B 355 cm^2 C 360 cm^2 D 465 cm^2 E 468 cm^2.	
27.	Find the area of the following parallelogram. 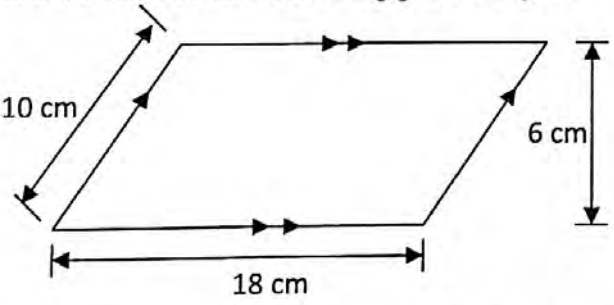 A 54 cm^2 B 60 cm^2 C 64 cm^2 D 108 cm^2 E 180 cm^2.	

NO	QUESTION	WORKING SPACE
28.	If the area of the trapezium is $420\ cm^2$, what is the area of the shaded part? (Use $\pi = \frac{22}{7}$). 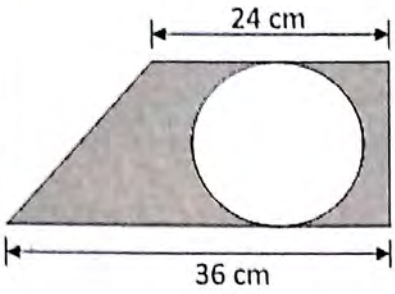 A $154\ cm^2$ B $276\ cm^2$ C $266\ cm^2$ D $366\ cm^2$ E $376\ cm^2$.	
29.	Find the value of x in the following figure. 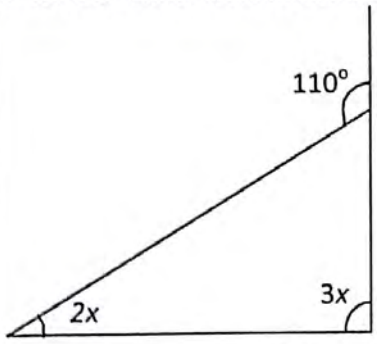 A 14° B 22° C 44° D 35° E 55°.	
30.	Find the value of k in the following figure: 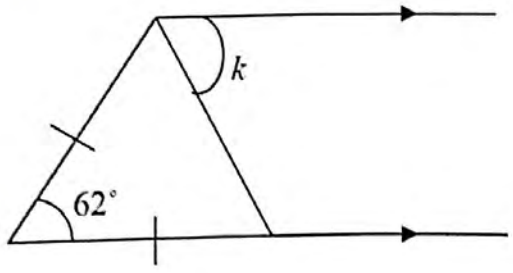 A 31° B 59° C 62° D 64° E 118°.	

NO	QUESTION	WORKING SPACE
31.	Find the value of x in the following figure: 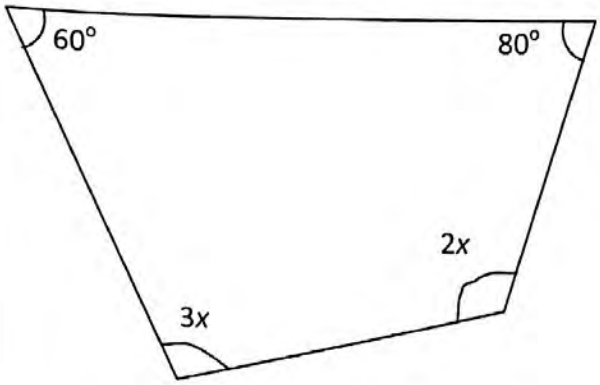 A 20° B 30° C 40° D 44° E 4°.	
32.	Write the coordinates for the point labelled W on the following graph. 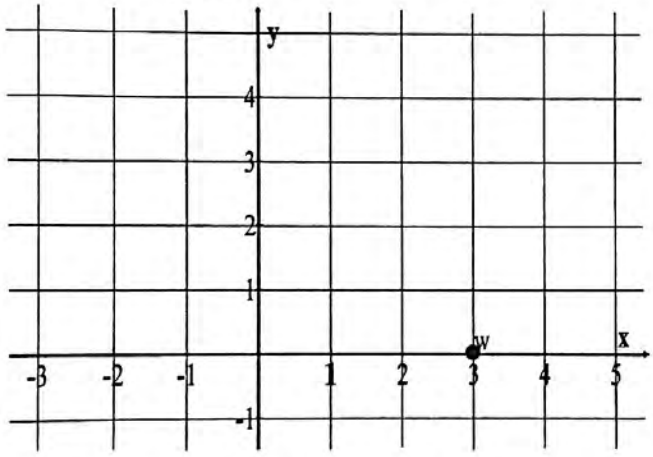 A (0, 3) B (3, 0) C (3, -1) D (-3, 1) E (2, 3).	
33.	Find the perimeter of a semicircle whose diameter ST is 100 cm. (Use $\pi = 3.14$) 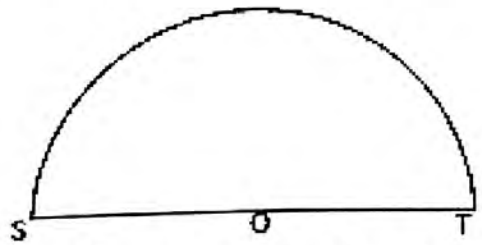 A 157 cm B 257 cm C 314 cm D 414 cm E 628 cm.	

NO	QUESTION	WORKING SPACE
34.	In the following figure, the curved part is a semicircle. What is the perimeter of the figure? (Use $\pi = \frac{22}{7}$) 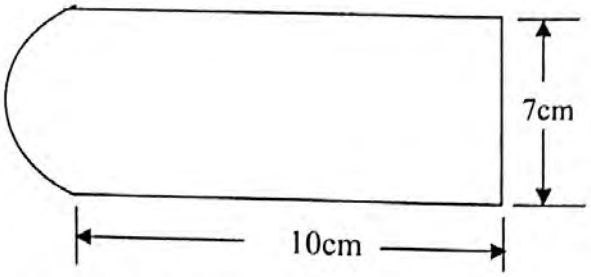 A 38 cm B 45 cm C 49 cm D 56 cm E 108.5 cm.	
35.	The following graph shows the amount of rainfall recorded at Majengo Primary School from Tuesday to Friday. Calculate the average rainfall. 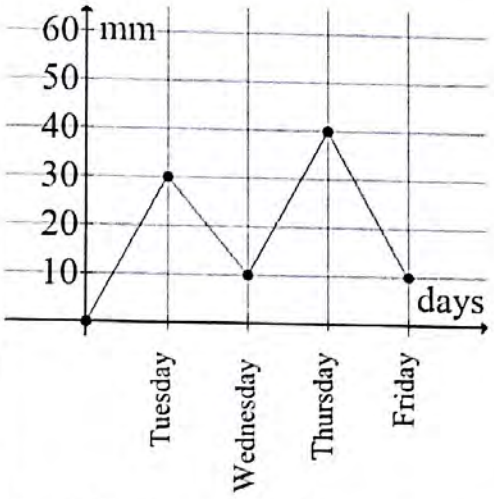 A 20.5 mm B 20 mm C 22.5 mm D 30 mm E 40 mm.	
36.	Find the volume of the following figure in cm^3. (Use $\pi = \frac{22}{7}$) 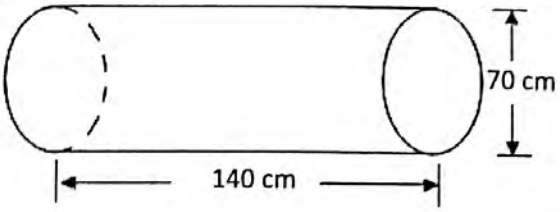 A 53,900 B 451,000 C 1,078,000 D 539,000 E 2,156,000.	

NO	QUESTION	WORKING SPACE
37.	Calculate the surface area of the rectangular prism ABCDEFGH. 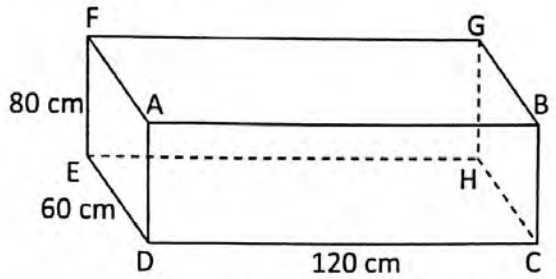 A $4,800cm^2$ B $20,600cm^2$ C $21,600cm^2$ D $42,200cm^2$ E $43,200cm^2$.	
38.	The following pie chart shows how Mr. Lukunjo spent his salary. If he spent shs 9,800 on luxury, what was his salary? 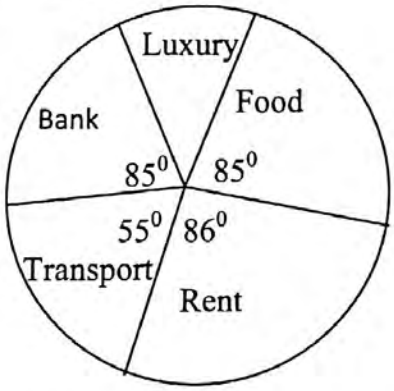 A sh 17,000 B sh 7,200 C sh 11,000 D sh 72,000 E sh 17,200.	

SECTION C: WORD PROBLEMS

For each of questions 39 – 50, work out the answer, then choose the correct option and **shade** its corresponding **letter** in the answer sheet provided.

NO	QUESTION	WORKING SPACE
39.	A car travelled a distance of 60 km in 30 minutes. Find the speed of the car in kilometres per hour. A 2 B 30 C 60 D 90 E 120.	
40.	Sikudhani sold the following items: 20 chapati @ shs 200; 50 eggs @ shs 200; 30 doughnuts @ shs 150; 15 bowls of soup @ shs 600 and 20 plates of rice @ sh 1,500; How much shillings did she receive in total? A 53,557 B 55,700 C 47,500 D 57,500 E 75,000.	
41.	Bombamzinga Primary School deposited shs 600,000 at the interest rate of 6% per year in NMB bank. After how many years will the school earn an interest of shs. 108,000? A 2 years B 3 years C 4 years D 5 years E 6 years.	
42.	Kachikolo runs 20km from Kapaki village towards West to Nyamwite village everyday and then 15 km towards South to Nyandura village. If he goes straight to Nyandura from Kapaki, how many kilometres shall he run in a day? A 10 km B 22 km C 35 km D 50 km E 25 km.	

NO	QUESTION	WORKING SPACE
43.	Upendo read $\frac{2}{5}$ of the book on Monday, half of the remained pages were read on Tuesday and still she had to read 105 pages. How many pages were there in the book? A 945 B 245 C 350 D 1050 E 150.	
44.	The age of the father is five times the age of the son. The sum of their age is 120 years. Find the age of the son. A 125 years B 20 years C 24 years D 30 years E 114 years.	
45.	Mr. Moshiro paid shs 5,400 for a shirt after getting 10% discount. What was its original selling price? A shs 6,000 B shs 6,600 C shs 54,000 D shs 5,400 E shs 5,410.	
46.	Nyaumwa and Kasanga shared sh 45,000 in the ratio of $2\frac{1}{4}:4\frac{1}{2}$ respectively. How much money did Nyaumwa get? A shs 10,000 B shs 15,000 C shs 20,000 D shs 25,000 E shs 30,000.	

NO	QUESTION	WORKING SPACE
47.	The average of maize harvest in four years at Bwasi ward is 6800 tons. If 6200 tons was harvested for second year, 4800 for third year and 5600 for fourth year, what amount of tons was harvested in first year? A 7,200 B 8,600 C 10,600 D 11,600 E 12,400.	
48.	The teacher for TEHAMA subject bought 50 sweets for pupils of her class. If she gave 3 sweets to each pupil, write the mathematical expression for the remained sweets. A $-3x+50$ B $3x-50$ C $50\div 3-x$ D $50+3x$ E $50\div x-3$	
49.	In a class of 80 pupils, $\frac{1}{5}$ of all pupils are boys. How many girls are in this class? A 38 B 80 C 22 D 48 E 32.	
50.	Mr. Masanja had $227\frac{1}{4}$ kg of meat. He sold $62\frac{1}{2}$ kg in the morning and $86\frac{1}{4}$ kg in the afternoon. How many kilograms were left? A 78 kg B 79 kg C $80\frac{1}{4}$ kg D $79\frac{1}{4}$ kg E 81 kg.	