Candidate's Examination Number.....

SMZ

ZANZIBAR EXAMINATIONS COUNCIL

FORM THREE ENTRANCE EXAMINATION

131 INFORMATION AND COMPUTER STUDIES

TIME 2:30 HOURS MONDAY 08TH NOVEMBER, 2021 P.M

INSTRUCTIONS TO CANDIDATES

1. This paper consists of THREE (3) sections A, B and C.
2. Answer ALL questions in sections A and B and any ONE (1) question from section C.
3. All answers must be written in the space provided.
4. Write your examination number on every page of this booklet.
5. Calculators, Cellular phones and unauthorized materials are not allowed in the examination room.

FOR EXAMINER'S USE ONLY					
QUESTION NUMBER	**MARKS**	**SIGNATURE**	**QUESTION NUMBER**	**MARKS**	**SIGNATURE**
1			7		
2			8		
3			9		
4			10		
5			11		
6			12		
TOTAL					

This paper consists of 11 printed pages.

Candidate's Examination Number.....

SECTION A: (15 Marks)

Answer ALL questions from this section.

1. Choose the letter of the correct answer and write it below the item number in the table below.

   i) Which of the following components allows the computer to permanently retain large amount of data?

   A. CPU B. CD C. Memory D. Mass storage device

   ii) Which one of the following is the best definition of computer?

   A. A device used to process information

   B. A device used to process information and store data.

   C. A device used to process data.

   D. A device used to output data.

   iii) Which of the memory chips is programmed during the manufacturing process?

   A. EEPROM B. PROM C. RAM D. ROM

   iv) The two (2) types of RAM are

   A. Erasable and volatile B. Erasable and programmable

   C. Static and dynamic D. Volatile and non-volatile

   v) It is not a sequential access device

   A. CD-ROM B. DAT C. Magnetic tape D. 8-mmHelical scan

   vi) An input device that is widely used in super market is

   A. bar code reader B. keyboard track ball B. Mouse D. keyboard

   vii) The fifth generation languages are also called

   A. Assembly language B. machine language

   C. Natural language D. Installation language

   viii) One of the following is a permanent storage device

   A. Compact disk B. Floppy disk C. hard disk D. Scanner

ix) These are two (2) possible values that are used to represent bit

A. One and two

B. One and zero

C. Zero and two

D. Zero and ten

x) A computer that holds databases and programs for many terminals is known as

A. Client

B. Domain

C. Node

D. Server

Answers

i	ii	iii	iv	v	vi	vii	viii	ix	x

2. Match the size of Data units in **List A** with the appropriate size in **List B** by writing the letter of the correct response below the item number in the table below.

COLUMN A	**COLUMN B**
i. 16 - 64 bits ii. 1 trillion Bytes calculate the location of a specific device iii. Eight bits iv. 1 million Bytes v. One binary digit	A Byte B. Word C. Bit D. Tetrabyte (TTB) E . Mega Bytes (MB) F. Kilo Bytes (KB) G. 60 - 90 bits

Answers

i	ii	iii	iv	v

Candidate's Examination Number……

SECTION B :(75 Marks)

Answer ALL questions from this section.

3. a) Write down two (2) differences between Primary storage and Secondary storage.

_____

_____

_____

_____

c) Fill the blank column

Secondary Storage Device	**Typical Capacity**
Magnetic hard disk	
Solid – state hard disk	
DVD	

4. a) Briefly explain the following.

i) Word wrap ii) Word art

_____

_____

_____

_____

_____

b) Identify three (3) possible reasons for a computer not being able to save data in to a disk.

_____

_____

_____

_____

c) i) Define the term word processing.

_____

_____

ii) Specialized software for word processing is known as _____

iii) Give two (2) advantages of using word processing program.

_____

_____

_____

5. a) As A computer specialist explain the benefits of having the following devices in a computer room.

i) Voltage stabilizers

_____

_____

ii) Surge protector

_____

_____

_____

b) Define the following terms.

i) Utility programs

_____

_____

_____

ii) Backup

_____

_____

_____

c) Briefly explain the effects of the following on computers.

i) Dust

_____

_____

_____

ii) Liquid

_____

_____

_____

6. a) i) What is a search engine?

_____

_____

_____

ii) Identify any four (4) common search engines.

_____

_____

_____

_____

b) Define the following terms.

i) e- learning

_____

_____

_____

ii) Electronic commerce

_____

_____

_____

c) Analyze any two (2) advantages of using e- learning method.

_____

_____

_____

_____

7. a) Write short explanation on computer peripherals.

_____

_____

_____

b) Give four (4) typical examples of computer peripherals.

_____

_____

_____

_____

c) The figure below show six (6) parts of a personal computer. Two (2) parts have already been labeled.

i) Write the names of the remaining parts.

_____

_____

_____

ii) State the importance of pats A, B, C and D.

_____

_____

_____

_____

_____

_____

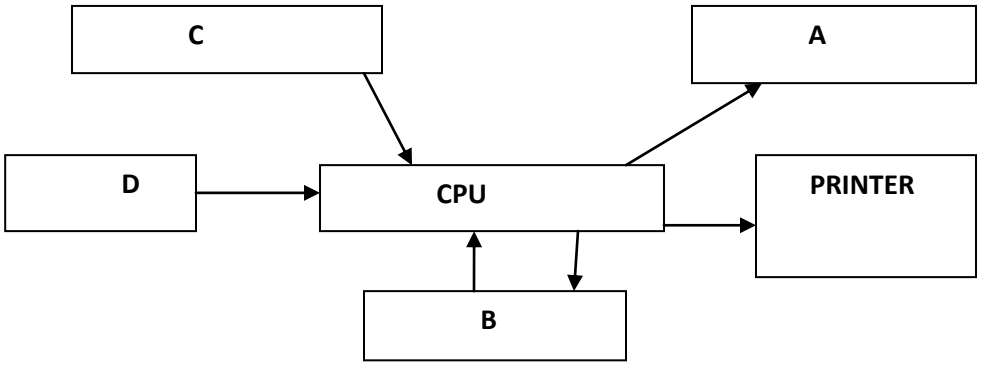

8. a) Show the difference between Application software and System software.

_____

_____

_____

_____

_____

b) i) Define the term operating system.

_____

_____

_____

ii) Mention any two (2) examples of operating systems.

_____

_____

iii) Write down any four (4) functions of operating system.

_____

_____

_____

_____

9. a) Early computing devices have been replaced by the modern computing devices due to several reasons. Identify any two (2) early computing devices.

_____

_____

_____

b) The first computer generation cover the period from 1951 – 1958. Write down the periods covered by.

i) Second computer generation: _____

ii) Third computer generation: _____

iii) Fourth computer generation: _____

c) Analyze two (2) characteristics of computers in 5th computer generation.

_____

_____

10. a) Define Data Transmition media.

_____

_____

b) List four (4) types of transmission media.

_____

_____

c) i) Outline two (2) advantages of using fiber cable.

_____

_____

_____

ii) Identify any two (2) disadvantages of fiber cable.

_____

_____

_____

Candidate's Examination Number.....

SECTION C: (10 Marks)

Answer only ONE (1) question from this section.

11.

	A	B	C	D	E	F	G
S/N	REG.NO	NAMEOF STUDENT	KISW	PHY	COMP	TOTAL	GRADE
3	309	MIIZA A	46	78	90		
4	310	MSURI J	65	72	81		
5	311	MNYASA K	50	99	98		
6	312	MDUNGI G	60	74	86		
7	313	MCHA A	79	60	70		
8	314	MKWERE S	40	67	99		
9	315	MNYAJI D	45	56	60		
10	316	MOHD T	60	78	85		
11	317	MKUBWA M	68	64	67		

From the table above.

a) i. Write a formula to find the average mark for the entire class.

ii. Write a formula to find the sum of marks for each student.

iii. Write a formula to find the maximum mark on computer subject.

_____

_____

_____

_____

_____

b) Write down two (2) applications of spreadsheet program.

_____

_____

_____

_____

12. a) Define the term internet.

_____

_____

_____

_____

b) Give the difference between the Hub and router.

_____

_____

_____

_____

_____

_____

_____

c) Briefly explain any three (3) benefits of having LAN in a work organization.

_____

_____

_____

_____

_____

_____

d) Analyze any three (3) factors to be considered when choosing an Internet service Provider (ISP).

_____

_____

_____

_____

_____

_____