PHYSICS FORM TWO NECTA 2018

by Yohana Lozaro

1

i	ii	iii	iv	v	vi	vii	viii	ix	x
B	B	B	C	D	B	A	C	A	B

xi	xii	xiii	xiv	xv	xvi	xvii	xviii	xix	xx
D	B	B	C	C	B	B	D	B	B

2

i	ii	iii	iv	v
F	A	G	D	C

3. (i)mass is the quantity of matter in a substance.

(ii)Net force.

(iii)Newton

(iv)Refraction

(v)Limit of proportionality.

4. (a)(i)sum of upward forces must be equal to sum of downward forces.

(ii)sum of clockwise momtents must be equal to sum of antilockwise moments.

(b)Center of mass is the point at which the total mass of the body is concentrated, centre of gravity is the point at which the whole weight of the body is said to act.

(c) Let mass of rule be m

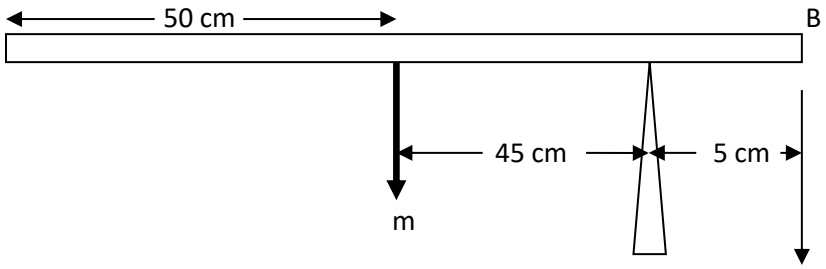

60 g

From,clockwise moments = anticlockwise moments

(m x 45) = (60 x 5)

Mass of rule is 6.7 g

5. (a)Energy is the capacity of doing a work.

(b)(i)Light energy

(ii)mechanical energy

(iii)heat energy

(iv)geothermal energy

(c) KE = ½ x m x v^2

30000 J = ½ x 1500 kg x v^2

Velocity of the mini-bus is 6 m/s

6. (a)(i)used to press large bolus

(ii) used to support lage structures like car in garage

(b)Because it can allow water to enter and hence cover the open space which reduces the mass of the shipso that it can float.

(c)Pressure = density x g height

= 1025 x 10 x 52

= 533000 N/m^2

7. (a)Acceleration is the rate of change of velocity

(b)Is when the rate at which velocity change is the same.

(c) convert 90 km/h into m/s = 25 m/s

From, v = u + at

0 = 25 + a x 10

Acceleration = - 2.5m/s^2

8. (a)(i)Machine is anything that simplify work.

(ii)Load Is any body thatis supported by the mchine

(b)Because some effort is used to overcome friction

(c)(i)MA = 4000/800 = 5

(ii)VR = 4.8/0.8 = 6

9. (a)Water will spurt at large distance at the lower hole than at the top because there is large pressure at bottom than at top hole.

(b)(i)Sharp knife has small are that increases the presure hence cut easy, than the blunt knife\

(ii)Pressure = force/area

$= 20 /(1 \times 10^{-6})$

Pressure is 20000000 N/m^2

(c) Apply pascals principle,

$P_s = P_L$

$F_S/A_S = F_L/A_S$

$120/(3 \times 10^{-4}) = F_L/(2 \times 10^{-2})$

Force required is 800 N

10. (a)Coulumb is the SI unit of electric charges

(b)Ohms law states that “At constant temperature, the p.d of the circuit equals to the current”

(c)(i)

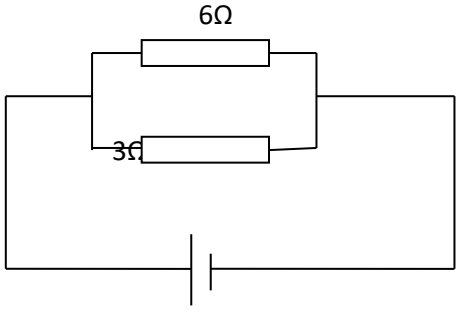

(ii)Effective R

$R = (6 \times 3)/(6 + 3)$

$R = 2\Omega$

(iii)Total current, $I = V/R$

$= 3/2$

$= 1.5A$

Then, current at $6\Omega = 3/6$

$= 0.5$ A