THE UNITED REPUBLIC OF TANZANIA
NATIONAL EXAMINATIONS COUNCIL
CERTIFICATE OF SECONDARY EDUCATION EXAMINATION

084

ELECTRICAL DRAUGHTING

(For Both School and Private Candidates)

Time: 3 Hours **Wednesday November 03, 2004 p.m.**

Instructions

1. This paper consists of six questions.
2. Answer question **number 1** and **three** others.
3. Question **one (1)** carries 40 marks and the rest 20 marks each.
4. Electronic calculators are **not** allowed in the examination room.
5. Cellular phones are **not** allowed in the examination room.
6. Write your **Examination Number** on every page of your answer booklet(s).

This paper consists of 3 printed pages.

Scanned by CamScanner

1. Draw full size in third angle orthographic projection, the following views of the details shown in Figure 1 below.

(a) Front elevation in direction of arrow T.

(b) End elevation in direction of arrow S.

(c) Plan view projected from view (a).

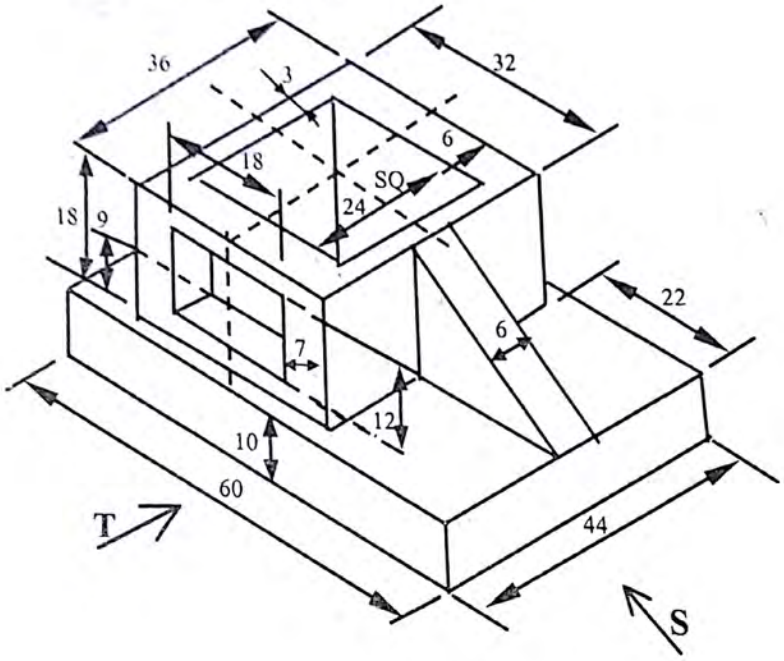

Fig. 1

2. (a) List **three (3)** types of printed circuit boards (PCB).

(b) State **two (2)** steps for manufacturing a PCB board.

(c) Write down **three (3)** types of drawings used to manufacture a printed circuit board.

3. Sketch the symbols for the following electrical accessories:

(a) Socket-outlet with earth.

(b) One-way one-gang switch.

(c) Two-way one-gang switch.

(d) Junction box.

(e) Incandescent lamp.

Scanned by CamScanner

4. (a) Write down the hardness number codes for the following pencil hardness categories indicated in brackets :

(i) Hard (five number codes).

(ii) Medium (five number codes).

(iii) Soft (six number codes).

(b) State the catergory of pencil used for:

(i) Lettering.

(ii) Construction lines.

(iii) Drafting.

(iv) Drawing.

5. The sketch shown below (Fig. 2) is a one-line diagram for a two-station control lighting scheme. Draw the functional diagram for the scheme.

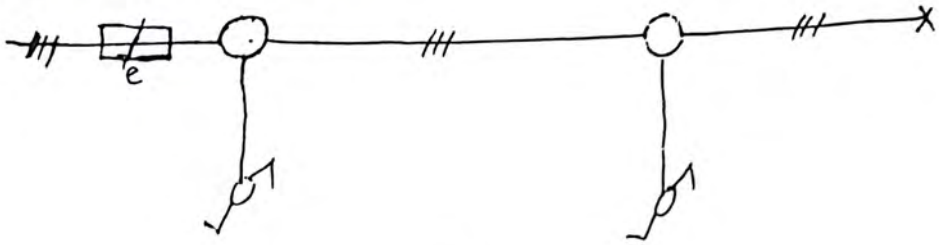

Fig. 2

6. Give the description of each symbol shown in the table:

SYMBOL	DESCRIPTION

Scanned by CamScanner