THE UNITED REPUBLIC OF TANZANIA
NATIONAL EXAMINATIONS COUNCIL
CERTIFICATE OF SECONDARY EDUCATION EXAMINATION

084 **ELECTRICAL DRAUGHTING**
(For Both School and Private Candidates)

Time: 3 Hours **Monday, 06th November 2017 p.m.**

Instructions

1. This paper consists of **six (6)** questions.
2. Answer question 1 and any other **three (3)** questions.
3. Question 1 carries 40 marks while other questions carry 20 marks each.
4. Calculators, cellular phones and any unauthorized materials are **not** allowed in the examination room.
5. Write your **Examination Number** on every page of your answer booklet(s).

1. Figure 1 is a solid block drawn in isometric projection. Consider that all of its dimensions are in millimeter. Draw the following views in first angle projection:

(a) Front elevation in the direction of arrow, X.

(b) Plan view.

(c) End elevation projected from view, S.

Construction lines must not be erased and all drawings should be clearly shown in a standard paper format.

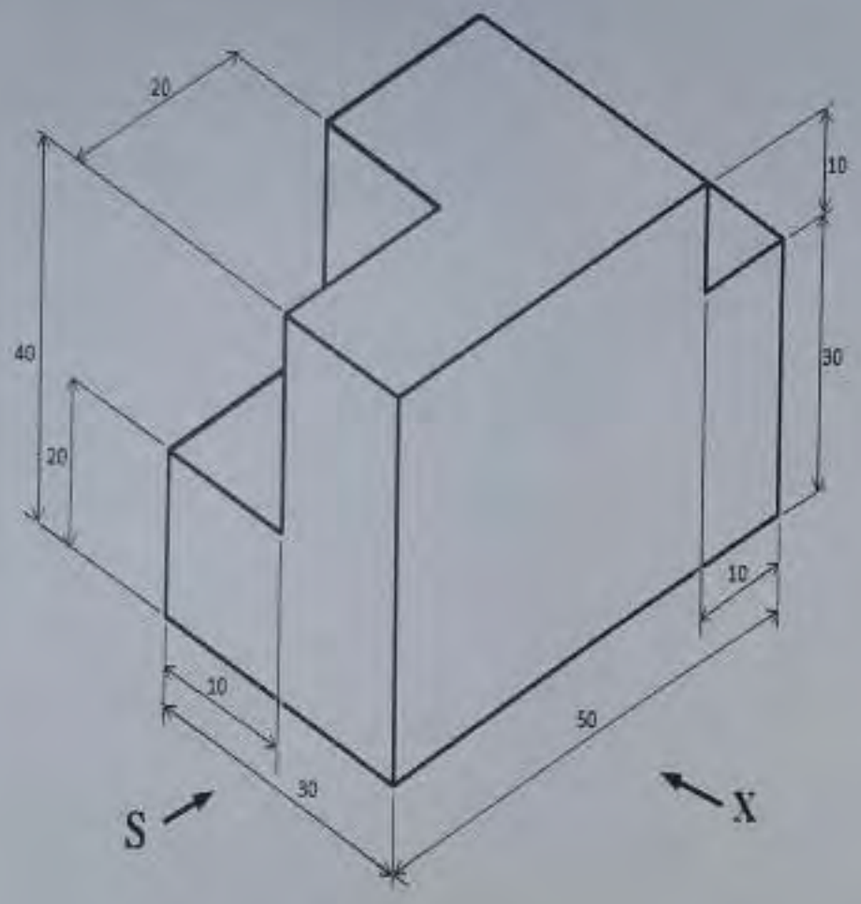

Figure 1

2. (a) List two types of block diagrams commonly used in engineering drawing.
(b) Draw a formal block diagram from the sketch given in Figure 2.

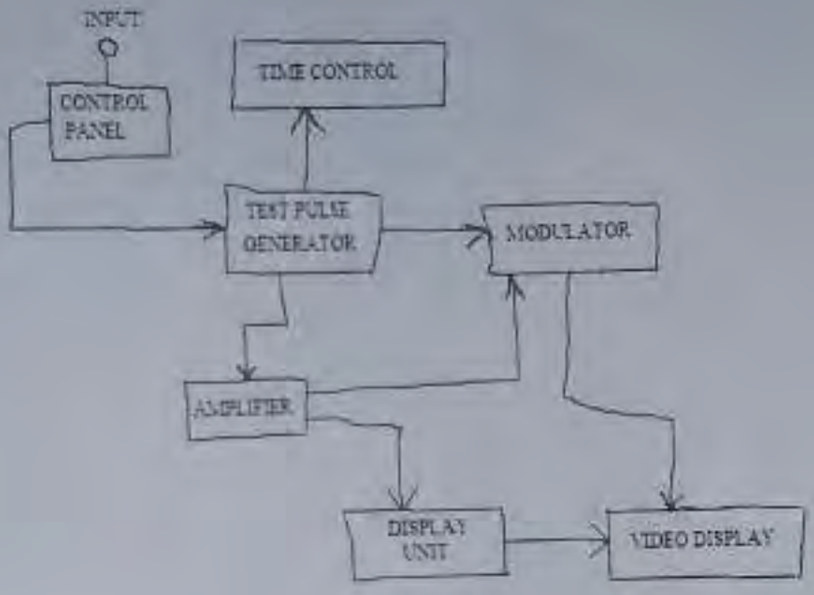

Figure 2

3. Draw electrical symbols represented by the following electrical equipments:

(a) Refrigerator
(b) Deep freezer
(c) Machine
(d) Air-conditioning
(e) Two-way switch
(f) Two-gang-1way switch
(g) Intermediate switch
(h) Earthed socket-outlet
(i) Cable laid under plaster
(j) Insulated cable in conduit.

4. A student is required to perform a hands-on exercise on signaling circuits. The materials provided are 12 V battery, a 12 V relay, a bell rated at 230V A.C., NO and NC push buttons and necessary cabling. Construct a schematic diagram for a relay that will operate a bell alarm circuit.

5. (a) List seven major types of drawings commonly used in the electronics industry.
(b) Mention three major types of printed circuit boards and for each type briefly explain how the components are mounted.

6. Give the names of the following electronic symbols:

(a) 

(b) 

(c) 

(d) 

(e) 

(f) 

(g) 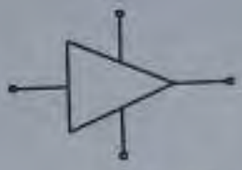

(h) 

(i) 

(j) 