THE UNITED REPUBLIC OF TANZANIA
NATIONAL EXAMINATIONS COUNCIL
CERTIFICATE OF SECONDARY EDUCATION EXAMINATION

031/1 **PHYSICS 1**
(For Both School and Private Candidates)

TIME: 3 Hours ***Thursday 16th October 2008 a.m.***

Instructions

1. This paper consists of sections A, B and C.
2. Answer **all** questions in sections A and B and **two (2)** questions from section C.
3. Electronic calculators are **not** allowed in the examination room.
4. Cellular phones are **not** allowed in the examination room.
5. Write your **Examination Number** on every page of your answer booklet(s).
6. Where necessary the following ants may be used.
   (i) Density of gold = 19.3 g/cm^3
   (ii) Density of silver = 10.5 g/cm^3
   (iii) 1 year = 366 days

This paper consists of 8 printed pages.

SECTION A (20 marks)

Answer **all** questions in this section.

1. For each of the items (i) – (x) choose the correct answer among the given alternatives and write its letter beside the item number.

   (i) When using a measuring cylinder one precaution to be taken is to
   - A check for zero error
   - B look at the meniscus from below the level of the water
   - C obtain more readings by looking from more than one direction
   - D position the eye in line with the base of the meniscus
   - E make sure that the measuring cylinder is clean

   (ii) A machine is able to lift 200 kg of bricks vertically up to a height of 30 m above the ground in 50 seconds. This implies that, the power of the machine in kilowatts is
   - A 0.12
   - B 1.2
   - C 6
   - D 1,200
   - E 3.

   (iii) When a liquid changes into a gas at a constant pressure, the temperature is known as its
   - A absolute zero
   - B boiling point
   - C evaporation point
   - D dew point
   - E melting point

   (iv) A typist uses a new carbon paper under her top typing paper for making a copy of a letter. When she holds the carbon paper close to a plane mirror she can read the letter. This happens because the mirror
   - A forms an image of the same size
   - B produces an inverted image
   - C produces a laterally inverted image
   - D forms a virtual image
   - E forms an image behind the mirror.

   (v) Planets are held and made to revolve around the Sun by the force of attraction
   - A between the Sun and the planets
   - B among the planets
   - C among all bodies
   - D between the Sun and the Earth
   - E between the Earth and the planets.

(vi) In the circuit below, all resistors have equal resistance R. What is the effective resistance between P and Q?

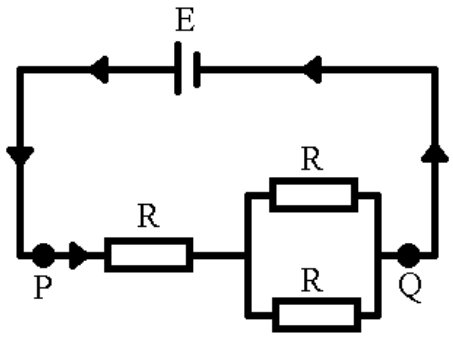

Figure 1

A $\frac{R}{2}$

B $\frac{2}{R}$

C $\frac{3R}{2}$

D $\frac{2R}{3}$

E 3R

(vii) During electromagnetic induction, the magnitude of the induced current depends on

A the strength of the magnet, number of turns of the coil and the magnetic flux

B the speed with which the magnet is moved in the field, the strength of the magnetic field and the magnetic flux

C the number of turns of the coil, the speed with which we turn the coil and the magnetic flux

D number of turns of the coil, the direction of the magnetic field, and the speed with which we turn the coil

E the cross-section area of the coil, the speed of t he coil and the direction of the magnetic field.

(viii) A radioactive nucleus ${}^{123}_{60}Z$ decays to give ${}^{119}_{58}Y$. Mention the type of radiation being emitted.

A Beta particle only

B Alpha and Beta particles only

C Gamma rays only

D Alpha particle only

E Beta and gamma rays only

(ix) Electrons can be emitted from the surface of metal by thermionic emission only if the kinetic energy of the electrons exceeds

A a certain value called the work function of the metal
B the highest energy that must be supplied to remove an electron from the surface of the metal
C the least energy that electrons can acquire when they are at rest
D the maximum energy any free electron has when it is just at a point of escaping from the surface of the metal
E the possible energy an electron can attain after leaving the metal surface.

(x) A P-N junction diode acts as a rectifier when it

A converts a.c. to d.c.
B converts d.c. to a.c.
C improves the amplitude of the input a.c. signals
D improves the amplitude of the input d.c. signals
E amplifies a.c. signals.

2. Match items in **List A** with responses in **List B** by writing the letter of the correct response beside the item number.

LIST A	**LIST B**
(i) γ-rays (ii) α-particle (iii) Cathode ray tube (iv) Infra-red radiation (v) Hard x-ray (vi) Capacitor (vii) Transistor (viii) P-type semi-conductor (ix) Extrinsic semi-conductor (x) Cathode ray	A. produced by thermionic emission, has short wave length and high penetrating power B. has long wavelength and low penetrating power C. very poor penetration power, easily absorbed by matter D. very high penetrating power and highly ionizing agent E. very high penetrating power and very poor ionizing agent F. it is negatively charged (electron) G. works by the principle of natural radioactivity H. works by the principle of thermionic emission I. positively charged particle (proton) J. originates from fairly high energy changes in the electron structure of atoms K. originates from low energy changes in the electron structure of atoms L. device made from semi-conductor materials which amplifies current or voltage M. device made from semi-conductor materials which rectifies current or voltage N. one which has a majority of holes and a minority of electrons O. one which has a majority of electrons and a minority of holes P. pure semi-conductor Q. impure semi-conductor R. a device for storing electric charges S. it is used to generate batteries T. produce heat on striking a metal target

SECTION B (60 marks)

Answer **all** questions in this section

3. (a) (i) "The relative density of brass is 8.5". Explain the meaning of this statement. **(1 mark)**

(ii) Find the mass of 500 cm^3 of brass if the density of water is 1 g/cm^3 **(3 marks)**

(b) A cup made of an alloy of gold and silver has a volume of 60 cm^3 and a mass of 1050 g. Find the mass of gold contained in the cup. **(6 marks)**

4. (a) (i) State the conditions under which two forces form a couple. **(1 mark)**

(ii) Give two examples of couples. **(2 marks)**

(b) A force of 60 N is acting at an angle of 30° to the horizontal. Find its horizontal and vertical components. Draw a vector diagram of the force and its components. **(7 marks)**

5. (a) (i) Explain why in a very cold morning a piece of metal bar feels much colder to the hand than a piece of wood. **(3 marks)**

(ii) Clinical thermometers should not be sterilized in boiling water. Give reasons. **(3 marks)**

(b) A piece of lead of mass 500 g falls from a height of 25 m. Assuming that all the energy changes into internal energy in the lead when it strikes the ground, calculate the rise in temperature of the lead if its specific heat capacity is 130 J/kgK. (g = 10 N/kg). **(4 marks)**

6. (a) Many high buildings are protected from lightning by lightning conductor.

(i) Give the meaning of lightning conductor. **(1 mark)**

(ii) Why does the lightning conductor have a sharp pointed top? **(1 mark)**

(b) (i) Give four (4) examples of household appliances that are based on the heating effect of current. **(4 marks)**

(ii) The resistance of a wire of length *l* is 4 ohms. Calculate the new resistance of the wire when its length is doubled and its volume unaltered. **(4 marks)**

7. (a) (i) Define atomic number. **(2 marks)**

(ii) Explain the effect of emission of β-particle from an atom of radioactive phosphorus of atomic number 15 and mass number 32. **(3 marks)**

(b) A radioactive element has a half life of 3 minutes. If the initial count rate is 512 per minute, find the time needed to reach a count rate of 8 per minute. **(5 marks)**

8. (a) (i) Define solar system. **(1 mark)**

(ii) Describe the force(s) which keep the solar system from breaking apart (intact). **(1 mark)**

(b) Distinguish between

(i) a planet and a star **(2 marks)**

(ii) a comet and a meteor. **(2 marks)**

(c) The Earth takes one year to orbit the Sun. The distance between the Earth and the Sun is 150×10^6 km. Calculate the speed of the Earth in the orbit. **(4 marks)**

SECTION C (20 marks)

Answer **two (2)** questions from this section.

9. (a) (i) Differentiate work from energy.
(ii) Explain, giving reasons, why a freely swinging pendulum bob eventually comes to rest. **(3 marks)**

(b) (i) State the law of conservation of energy.
(ii) A crate of soda of mass 10 kg was accelerated from a velocity of 10 m/s to 20 m/s when a force of 50 N was applied on it. Find the displacement of the crate. **(3 marks)**

(c) A man wearing a bullet-proof vest stands still on a smooth slippery surface. His total mass is 80 kg. A bullet of mass 20 grams is fired at a velocity of 400 m/s. It is stopped by the vest and falls to the ground. Find the velocity of the man after impact with the bullet. **(4 marks)**

10. (a) In a cathode ray tube, explain how
(i) the filament is made to produce electrons
(ii) electrons are made to accelerate
(iii) Electrons make the fluorescent screen to glow. **(3 marks)**

(b) (i) Mention the main feature which differentiates x-ray tube from the cathode ray tube.

(ii) State the main similarities existing between the features of an x-ray tube and the cathode ray tube. **(3 marks)**

(c) (i) Except for the "window", there is a lead shield around the x-ray tube. Explain giving a reason.

(ii) State **three (3)** uses of cathode ray tube. **(4 marks)**

11. (a) (i) Define transistor.

(ii) Give reasons to explain why npn transistors are used in high frequency circuits and pnp transistors are used in low frequency circuits. **(3 marks)**

(b) (i) A certain transistor has a current gain of 50. Explain the meaning of this statement in terms of the magnitude of input and output current.

(ii) In a common emitter mode, the base emitter junction is a low resistance junction while the base-collector junction is high resistance junction. Explain. **(3 marks)**

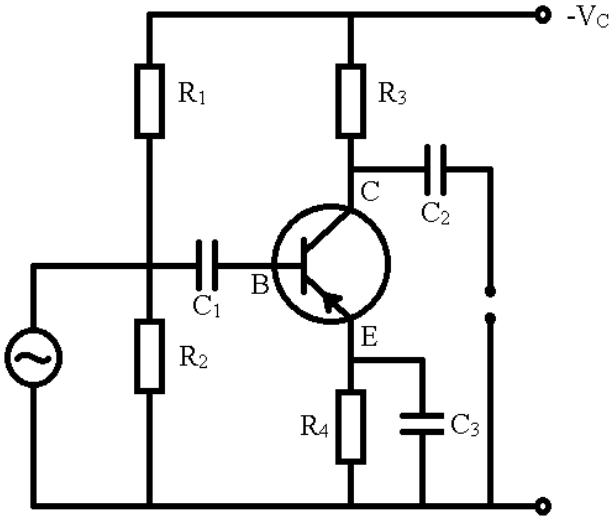

Figure 2

Figure 2 above shows a pnp transistor fully stabilized. Describe the functions of

(i) capacitors C_2 and C_3

(ii) resistor R_4 **(4 marks)**