THE UNITED REPUBLIC OF TANZANIA

NATIONAL EXAMINATIONS COUNCIL OF TANZANIA

ADVANCED CERTIFICATE OF SECONDARY EDUCATION EXAMINATION

131/1 **PHYSICS 1**

(For Both School and Private Candidates)

Time: 2:30 Hours **ANSWERS** **Year: 2023**

Instructions

1. This paper consists of sections Section A and B with total of ten questions.

2. Answer all questions in section A and two questions in section B.

1. a) i) How is the term dimension different from the dimensional formula?

- Dimension refers to the fundamental physical quantities (length, mass, time, etc.) that make up a derived physical quantity. It represents the nature of a physical quantity in terms of its fundamental units.
- The dimensional formula is the representation of a physical quantity in terms of base units, expressed using symbols like M (mass), L (length), and T (time). For example, force has the dimensional formula [M L T^{-2}].

1. a) ii) Apply the method of dimension to deduce the value of x in the expression F = kAρV^x, where F, V, A, ρ, and k are the force acting on the body, speed, surface area, density, and a dimensionless constant, respectively.

Writing the dimensional formulas:
- Force, F = [M L T^{-2}]
- Area, A = [L^2]
- Density, ρ = [M L^{-3}]
- Velocity, V = [L T^{-1}]

Equating dimensions on both sides:
[M L T^{-2}] = [L^2]^a [M L^{-3}]^b [L T^{-1}]^x

Expanding:
[M L T^{-2}] = [L^(2a) M^b L^(-3b) L^x T^(-x)]

Grouping terms:
M: b = 1
L: 2a - 3b + x = 1
T: -x = -2 $\Longrightarrow$ x = 2

Substituting b = 1 in the length equation:
2a - 3(1) + 2 = 1
2a - 3 + 2 = 1
2a = 2
a = 1
Thus, the values are a = 1, b = 1, and x = 2.

1. b) The pressure P can be calculated from the relation P = F / πR^2, where F is the force and R is the radius. If the percentage errors of F and R are ±2 and ±1 respectively, determine the possible percentage error of P.

Using the error propagation formula:
Percentage error in P = (percentage error in F) + 2 × (percentage error in R)

= 2 + 2(1)
= 2 + 2
= 4%

Thus, the possible percentage error in P is 4%.

2. a) How is the horizontal range of a projectile affected when its initial velocity is doubled for a given angle of projection, θ?

The horizontal range of a projectile is given by:

$R = (u^2 \sin 2\theta) / g$

If the initial velocity u is doubled:

New range $R' = ((2u)^2 \sin 2\theta) / g$
$R' = (4u^2 \sin 2\theta) / g$
$R' = 4R$

Thus, when the initial velocity is doubled, the range becomes four times the original range.

2. b) An aircraft travelling at 150 km/hr dropped a luggage of food to flood victims isolated on a patch of land 250 m below.

i) The time on which the luggage should be dropped before the aircraft is directly overhead.

Using the equation of motion:

$h = 1/2\ g\ t^2$
$250 = 1/2\ (10)\ t^2$
$250 = 5t^2$
$t^2 = 50$
$t = 7.07$ s

The luggage should be dropped approximately 7.07 seconds before the aircraft is overhead.

ii) The speed of luggage as it reaches the ground.

The final velocity is given by:
$v = u + gt$
$v = 0 + (10 \times 7.07)$
$v = 70.7$ m/s
Thus, the luggage reaches the ground at 70.7 m/s.

3. a) A car is moving with a speed of 40 m/s around an unbanked curve of radius 500 m. Determine the least coefficient of friction which allows the car to negotiate the curve without sliding.

Using the equation for circular motion:

$\mu = v^2 / (r\ g)$

Substituting values:

$\mu = (40^2) / (500 \times 10)$
$\mu = 1600 / 5000$
$\mu = 0.32$

Thus, the minimum coefficient of friction required is 0.32.

3. b) A stone of mass 1 kg attached to a string of length 1 m is whirled in a horizontal circle of radius 0.6 m at a constant speed. Calculate:

i) The tension in the string.

Using centripetal force equation:

$T \cos \theta = mg$
$T \sin \theta = mv^2 / r$

Dividing equations:

$\tan \theta = v^2 / (r\ g)$

Solving for T:

$T = mg / \cos \theta$

ii) The maximum number of revolutions per second it can make.

Using the relation:

$v = 2\pi r\ f$

Solving for f:

$f = v / (2\pi r)$

Substituting values:

$f = (g \tan \theta) / (2\pi r)$

Substituting calculated values will give the required frequency.

4. a) i) Give two daily life examples on which Newton's first law of motion applies.

- A person in a moving car leans forward when brakes are suddenly applied, due to inertia.
- A book on a table remains at rest until an external force is applied.

4. a) ii) Sand drops vertically at the rate of 100 g/s on a horizontal conveyor belt moving at a steady velocity of 5 cm/s. Find the force required to keep the belt moving.

Force is given by:

F = rate of mass flow × velocity

m = 100 g/s = 0.1 kg/s
v = 5 cm/s = 0.05 m/s

$F = 0.1 \times 0.05$
$F = 0.005$ N

5. a) A motor car tyre has a pressure of 4 atmospheres at a room temperature of 27°C. If the tyre suddenly bursts, calculate the temperature of the escaping air.

Using the adiabatic relation:

$T_2 = T_1 (P_2/P_1)^{(\gamma-1)/\gamma}$

For air, $\gamma = 1.4$.
$T_1 = 273 + 27 = 300$ K
$P_1 = 4$ atm
$P_2 = 1$ atm

$T_2 = 300 (1/4)^{((1.4-1)/1.4)}$
$T_2 = 300 (1/4)^{0.286}$
$T_2 = 300 \times 0.398$
$T_2 = 119.4$ K

The temperature of the escaping air is 119.4 K.

6. a) i) What is meant by a reversible process as applied in thermodynamics?

- A reversible process is a thermodynamic process that occurs so slowly that the system remains in thermodynamic equilibrium throughout the process.
- It can be reversed without any net change in the system and its surroundings.
- In reality, no process is perfectly reversible due to unavoidable losses such as friction and heat dissipation.
- An example of a nearly reversible process is the slow compression and expansion of an ideal gas in a frictionless piston.

6. a) ii) Distinguish isobaric from isochoric processes.

- Isobaric process: A thermodynamic process in which pressure remains constant while volume changes.
  - Example: Heating water in an open vessel where expansion occurs at constant atmospheric pressure.
  - Work is done by or on the system: $W = P \Delta V$.

- Isochoric process:A thermodynamic process in which volume remains constant while pressure changes.
  - Example: Heating gas in a rigid container where no expansion occurs.
  - No work is done in this process: $W = 0$.

6. b) If 1 g of water is subjected to a pressure of 1.013×10^5 Pa, it becomes 1671 cm^3 of steam. Calculate:

i) The external work done.

External work done in expansion is given by:

$W = P \Delta V$

Where:
- $P = 1.013 \times 10^5$ Pa
- Initial volume of water (V_1) = 1 cm^3 = 1×10^{-6} m^3
- Final volume of steam (V_2) = 1671 cm^3 = 1.671×10^{-3} m^3

Change in volume:
$\Delta V = V_2 - V_1$
$\Delta V = (1.671 \times 10^{-3}) - (1 \times 10^{-6})$
$\Delta V = 1.67 \times 10^{-3}$ m^3

Substituting into the formula:

$W = (1.013 \times 10^5) \times (1.67 \times 10^{-3})$
$W = 169.2$ J

The external work done is 169.2 J.

ii) The increase in internal energy of the system.

Using the first law of thermodynamics:

$\Delta U = Q - W$

Since the heat supplied (Q) to convert 1 g of water to steam at constant pressure is the latent heat of vaporization:

$Q = m L$

Where:
- $m = 1\ g = 1 \times 10^{-3}\ kg$
- $L = 2.26 \times 10^{6}\ J/kg$ (latent heat of vaporization of water)

$Q = (1 \times 10^{-3}) \times (2.26 \times 10^{6})$
$Q = 2260\ J$

Now calculating internal energy change:

$\Delta U = Q - W$
$\Delta U = 2260 - 169.2$
$\Delta U = 2090.8\ J$
The increase in internal energy of the system is 2090.8 J.

7. a) Analyse three possible solutions to the side effects of global warming.

- Reducing greenhouse gas emissions
  - Using renewable energy sources like solar, wind, and hydroelectric power instead of fossil fuels reduces carbon dioxide emissions.

- Afforestation and reforestation
  - Planting trees helps absorb carbon dioxide from the atmosphere, reducing the greenhouse effect and slowing down global warming.
- Energy conservation and efficiency
  - Using energy-efficient appliances, reducing waste, and promoting public transport instead of private vehicles can lower overall carbon emissions.

7. b) i) Briefly explain four major causes of water pollution.

-Industrial waste

- Factories discharge toxic chemicals, heavy metals, and harmful pollutants into rivers and oceans, contaminating water sources.

- Agricultural runoff
  - Excess fertilizers, pesticides, and herbicides wash into water bodies, causing pollution and leading to eutrophication.

- Sewage and wastewater
  - Untreated sewage dumped into rivers and lakes spreads diseases and depletes oxygen levels, affecting aquatic life.

- Oil spills
  - Leakage from oil tankers and pipelines contaminates large water bodies, damaging marine ecosystems.

7. b) ii) What are the three disadvantages of using solar energy?

- High initial cost
  - The installation of solar panels and batteries is expensive compared to traditional power sources.

- Weather dependence
  - Solar panels generate less energy on cloudy days or at night, making them unreliable in certain conditions.

- Large space requirement
  - Solar farms require significant land area to generate substantial electricity, limiting their use in urban areas.

8. a) i) Identify two conservation laws embodied in Kirchhoff's rules stating their physical significance.

- Kirchhoff's Current Law (KCL)
  - Based on the conservation of charge, it states that the total current entering a junction equals the total current leaving the junction.

- Kirchhoff's Voltage Law (KVL)
  - Based on the conservation of energy, it states that the sum of all voltages in a closed loop equals zero.

8. a) ii) Why is it safe for a bird to stand on a high-voltage wire without being harmed?

- A bird's two legs are at nearly the same potential, so there is no potential difference across its body.
- Since current flows only when there is a potential difference, the bird does not experience electric shock.

8. b) Study the circuit diagram in Figure 2 and apply Kirchhoff's rules to find the values of the currents I_1, I_2, and I_3.

Using Kirchhoff's Voltage Law:

Loop 1 (C-D-E-B-C):
$14 - 4I_1 - 10 = 0$
$4I_1 = 4$
$I_1 = 1$ A

Loop 2 (D-E-F-D):
$6I_2 - 2I_3 = 0$
$6I_2 = 2I_3$
$I_2 = (1/3)\, I_3$

Using Kirchhoff's Current Law at node E:
$I_1 = I_2 + I_3$
$1 = (1/3)\, I_3 + I_3$
$1 = (4/3)\, I_3$
$I_3 = 0.75$ A

Substituting I_3 in I_2 equation:
$I_2 = (1/3) \times 0.75$
$I_2 = 0.25$ A

Thus, the currents are:
$I_1 = 1$ A
$I_2 = 0.25$ A
$I_3 = 0.75$ A

8. c) i) A capacitor of 1 μF is used in a television circuit where the frequency and the current flowing are 1000 Hz and 2 mA (r.m.s) respectively. Compute the voltage across the capacitor.

The capacitive reactance is given by:

$Xc = 1 / (2\pi fC)$
$Xc = 1 / (2\pi \times 1000 \times 1 \times 10^{-6})$
$Xc = 159.2\ \Omega$

Voltage across the capacitor:

$V = I\, Xc$
$V = (2 \times 10^{-3}) \times 159.2$
$V = 0.3184$ V

8. c) ii) Determine the current flowing when an a.c voltage of 20 V (r.m.s) and frequency of 50 Hz is connected to the capacitor in 8 c) i).

Using the same formula:
$Xc = 1 / (2\pi fC)$
$Xc = 1 / (2\pi \times 50 \times 1 \times 10^{-6})$
$Xc = 3183\ \Omega$

Current:

$I = V / Xc$
$I = 20 / 3183$
$I = 6.29\ mA$

9. a) i) Comment on the argument that electrical conductivity of a semiconductor depends on temperature variation.

- The electrical conductivity of semiconductors increases with temperature because heat excites more electrons from the valence band to the conduction band.
- In contrast, metals have decreasing conductivity with increasing temperature due to electron scattering.

9. a) ii) Draw a circuit diagram showing a reverse-biased diode.

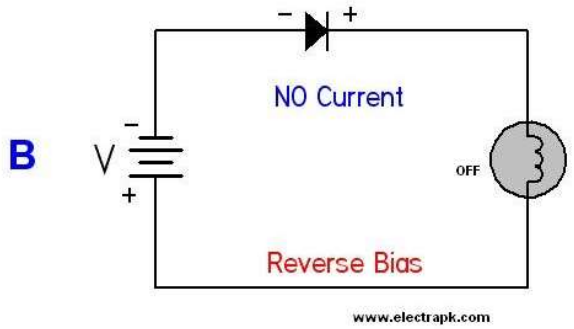

- A reverse-biased diode has its positive terminal connected to the negative terminal of the power supply and the negative terminal to the positive side of the power supply.

9. a) iii) Why is there very little current flow in the circuit drawn in a) ii)?

- In reverse bias, the depletion region widens, creating a high resistance path.
- This significantly reduces the current to a negligible leakage current.

9. b) Study the circuit diagram in Figure 3 then find the gain of the amplifier.
Gain of an amplifier:
$Gain = - (Rf / Rin)$

Given $Rf = 100\ \Omega$, $Rin = 10\ \Omega$:

1Gain = - (100 / 10)
Gain = -10

9. c) i) What is meant by a voltage follower? Give one importance.
- A voltage follower is an op-amp circuit with unity gain (output voltage equals input voltage).
- Importance: It provides high input impedance and low output impedance, useful for buffering signals without loading the source.

9. c) ii) Draw a diagram to show an Op-Amp as a voltage follower.
- The voltage follower circuit has the output directly connected to the inverting input (-), and the input signal is fed to the non-inverting input (+).

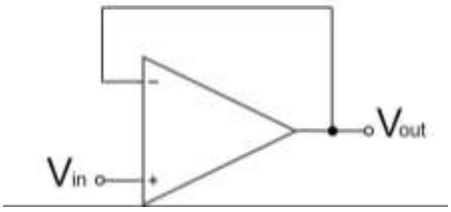

10. a) i) Sketch the circuit symbol for NPN transistor showing the direction of a convectional current.

- An NPN transistor consists of three terminals: the emitter (E), base (B), and collector (C).
- The conventional current flows from the collector to the emitter when the transistor is in active mode.
- The symbol consists of an arrow on the emitter pointing outward, indicating the direction of conventional current flow.
- The diagram provided earlier represents this configuration.

10. a) ii) Under what condition does a semiconductor diode behave as an open switch?

- A semiconductor diode behaves as an open switch when it is reverse-biased.
- In reverse bias, the applied voltage increases the width of the depletion region, preventing the flow of current except for a small leakage current.

10. b) i) Why insulators do not conduct electricity under ordinary conditions? Explain in terms of energy band theory.

- In insulators, the valence band is completely filled with electrons, and the conduction band is empty.
- There is a large energy gap (greater than 5 eV) between the valence band and conduction band.
- Under ordinary conditions, electrons cannot gain enough energy to cross this gap, preventing conduction.
- Hence, insulators do not conduct electricity under normal circumstances.

10. b) ii) A common emitter amplifier has an input resistance of 0.5 Ω and output resistance of 45 Ω. If the current gain, β = 65, find the voltage gain.

Voltage gain (Av) in a common emitter amplifier is given by:

Av = β × (output resistance / input resistance)

Substituting values:

Av = 65 × (45 / 0.5)
Av = 65 × 90
Av = 5850

Thus, the voltage gain is 5850.

10. c) i) What is the purpose of the barrier potential difference in a P-N Junction?

- The barrier potential prevents free movement of charge carriers across the junction in equilibrium.
- It maintains the depletion region, ensuring that the diode conducts only in forward bias.
- It helps control current flow, making the diode function as a rectifier.

10. c) ii) Identify two advantages of a junction diode and sketch its characteristic curve which shows how it can act as a rectifier.

Advantages of a junction diode:

- Unidirectional conduction
  - The diode allows current to flow only in one direction (forward bias) and blocks it in reverse bias, making it useful in rectifiers.

- High switching speed
  - Semiconductor diodes can switch on and off rapidly, making them essential in high-speed electronic circuits.

A characteristic curve of a junction diode shows:
- In forward bias, current increases exponentially after the threshold voltage (approximately 0.7V for silicon, 0.3V for germanium).
- In reverse bias, only a small leakage current flows until the breakdown voltage is reached.